# MAGNUS

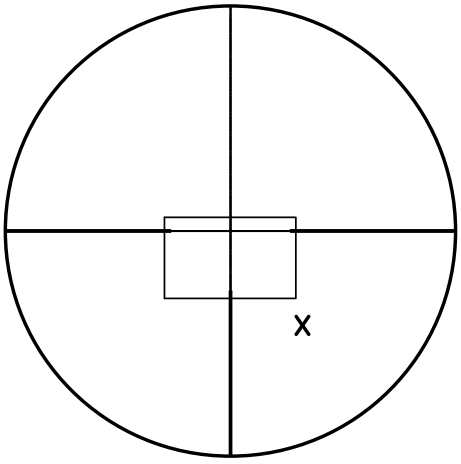


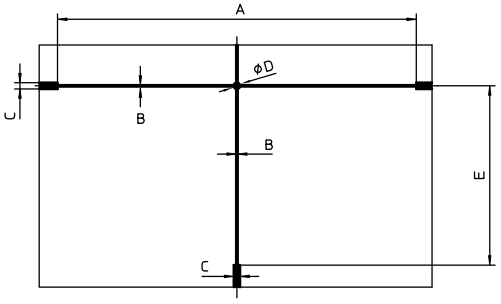


4A

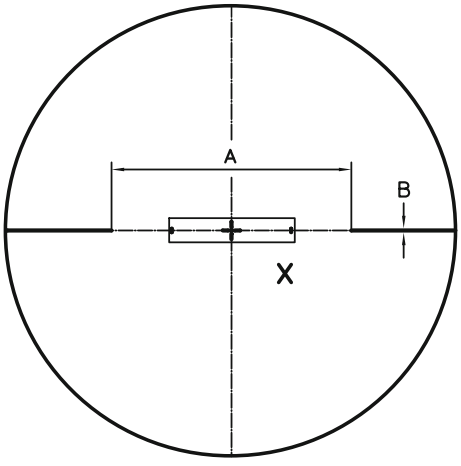


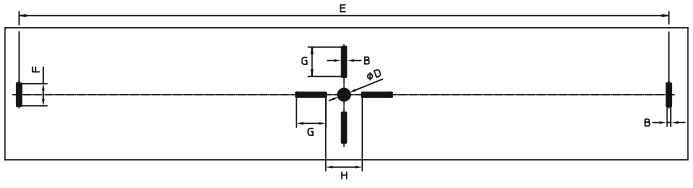


L3D

(Table with dimensions on page 4)


Leica Camera AG / Oskar-Barnack-Straße 11 / D-35606 Solms / Telephone +49 (0) 6442-208-0 / Telefax +49 (0) 6442-208-333 / info@leica-camera.com / www.leica-camera.com

# MAGNUS

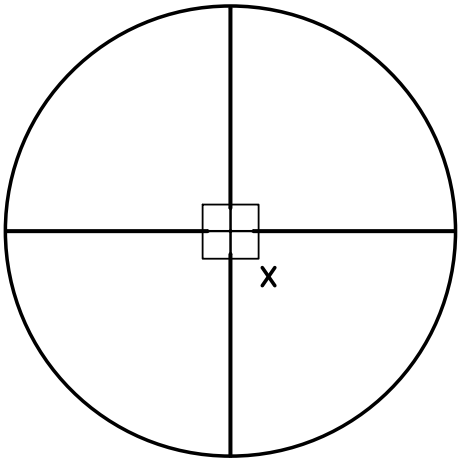


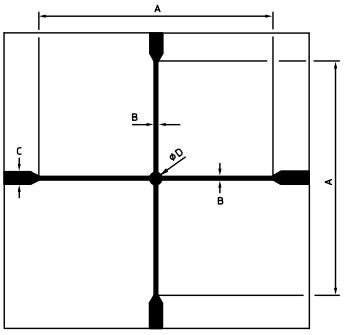


Plex

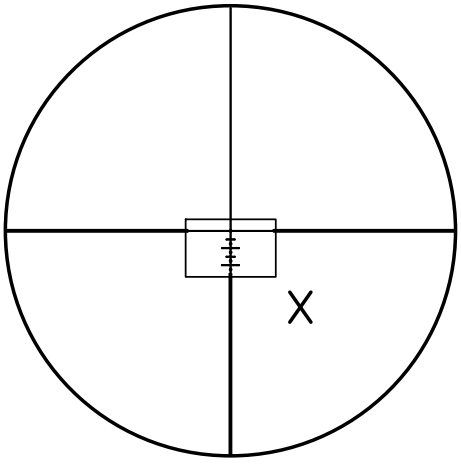


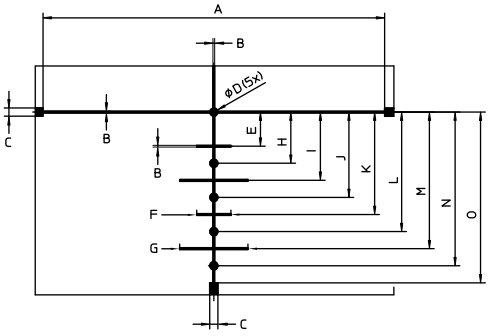


Ballistik

(Table with dimensions on page 4)


Leica Camera AG / Oskar-Barnack-Straße 11 / D-35606 Solms / Telephone +49 (0) 6442-208-0 / Telefax +49 (0) 6442-208-333 / info@leica-camera.com / www.leica-camera.com

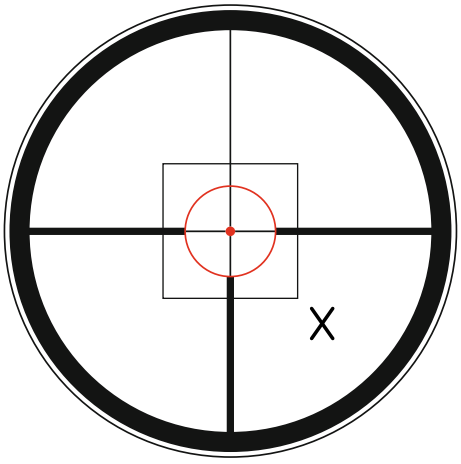


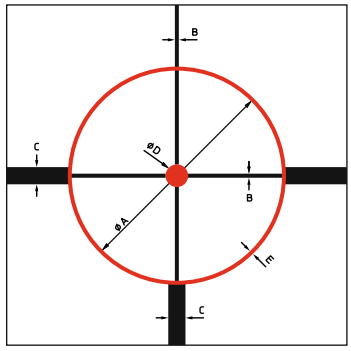


CDi

(Table with dimensions on page 4)


Leica Camera AG / Oskar-Barnack-Straße 11 / D-35606 Solms / Telephone +49 (0) 6442-208-0 / Telefax +49 (0) 6442-208-333 / info@leica-camera.com / www.leica-camera.com

# MAGNUS

## Reticle dimensions in cm / 100 m

| | | Reticle 1–6,3 × 24 | | | | Reticle 1,5–10 × 42 | | | | | Reticle 2,4–16 × 56 | | |
|---|---|---|---|---|---|---|---|---|---|---|---|---|---|
| **Reticle** | | **4A** | **L3D** | **Plex** | **CDi** | **4A** | **L3D** | **Plex** | **Ballistik** | **CDi** | **4A** | **Plex** | **Ballistik** |
| Distance between posts | | | | | | | | | | | | | |
| min. | **A** | 1426.0 | 2856.0 | 509.0 | 322.0 | 900.0 | 1806.0 | 322.0 | 644.0 | 204.0 | 568.0 | 203.0 | 406.0 |
| max. | | 220.0 | 443.0 | 79.0 | 50.0 | 140.0 | 280.0 | 50.0 | 100.0 | 32.0 | 88.0 | 31.5 | 62.5 |
| Cross -hair Sub-tension | | | | | | | | | | | | | |
| min. | **B** | 5.0 | 8.0 | 5.0 | 7.7 | 3.2 | 5.0 | 3.2 | 3.2 | 49.0 | 2.0 | 2.0 | 2.1 |
| max. | | 0.8 | 1.2 | 0.8 | 1.2 | 0.5 | 0.8 | 0.5 | 0.5 | 0.8 | 0.3 | 0.3 | 0.3 |
| Post Sub-tension | | | | | | | | | | | | | |
| min. | **C** | 24.5 | – | 25.5 | 38.6 | 15.5 | – | 15.5 | 15.5 | 24.5 | 10.0 | 10.0 | 10.0 |
| max. | | 4.0 | – | 4.0 | 6.0 | 2.4 | – | 2.4 | 2.4 | 3.8 | 1.5 | 1.5 | 1.5 |
| Dot Coverage | | | | | | | | | | | | | |
| min. | **D** | 25.0 | 25.0 | 25.0 | 25.0 | 15.5 | 15.5 | 15.5 | 15.5 | 15.5 | 10.0 | 10.0 | 10.0 |
| max. | | 4.0 | 4.0 | 4.0 | 4.0 | 2.4 | 2.4 | 2.4 | 2.4 | 2.4 | 1.5 | 1.5 | 1.5 |
| Post distance | | | | | | | | | | | | | |
| min. | **E** | – | 1423.0 | – | 19.3 | – | 900.0 | – | 64.0 | 12.2 | – | – | 41.6 |
| max. | | – | 220.0 | – | 3.0 | – | 140.0 | – | 10.0 | 2.0 | – | – | 6.3 |
| Stadia Line Width | | | | | | | | | | | | | |
| min. | **F** | – | 48.0 | – | – | – | 30.5 | – | 64.0 | – | – | – | 41.6 |
| max. | | – | 7.5 | – | – | – | 5.0 | – | 10.0 | – | – | – | 6.3 |
| Stadia Line Width | | | | | | | | | | | | | |
| min. | **G** | – | 64.0 | – | – | – | 40.5 | – | 129.0 | – | – | – | 81.0 |
| max. | | – | 10.0 | – | – | – | 6.0 | – | 20.0 | – | – | – | 12.6 |
| Post distance | | | | | | | | | | | | | |
| min. | **H** | – | 80.0 | – | – | – | 50.0 | – | 97.0 | – | – | – | 61.0 |
| max. | | – | 12.0 | – | – | – | 8.0 | – | 15.0 | – | – | – | 9.5 |
| Post distance | | | | | | | | | | | | | |
| min. | **I** | – | – | – | – | – | – | – | 133.3 | – | – | – | 83.3 |
| max. | | – | – | – | – | – | – | – | 20.0 | – | – | – | 12.5 |
| Post distance | | | | | | | | | | | | | |
| min. | **J** | – | – | – | – | – | – | – | 161.0 | – | – | – | 101.0 |
| max. | | – | – | – | – | – | – | – | 25.0 | – | – | – | 16.0 |
| Post distance | | | | | | | | | | | | | |
| min. | **K** | – | – | – | – | – | – | – | 193.0 | – | – | – | 122.0 |
| max. | | – | – | – | – | – | – | – | 30.0 | – | – | – | 19.0 |
| Post distance | | | | | | | | | | | | | |
| min. | **L** | – | – | – | – | – | – | – | 226.0 | – | – | – | 142.0 |
| max. | | – | – | – | – | – | – | – | 35.0 | – | – | – | 22.0 |
| Post distance | | | | | | | | | | | | | |
| min. | **M** | – | – | – | – | – | – | – | 258.0 | – | – | – | 162.0 |
| max. | | – | – | – | – | – | – | – | 40.0 | – | – | – | 25.0 |
| Post distance | | | | | | | | | | | | | |
| min. | **N** | – | – | – | – | – | – | – | 290.0 | – | – | – | 183.0 |
| max. | | – | – | – | – | – | – | – | 45.0 | – | – | – | 28.0 |
| Post distance | | | | | | | | | | | | | |
| min. | **O** | – | – | – | – | – | – | – | 322.0 | – | – | – | 203.0 |
| max. | | – | – | – | – | – | – | – | 50.0 | – | – | – | 32.0 |

All specifications in centimeters on 100 meters (cm / 100 m)


Leica Camera AG / Oskar-Barnack-Straße 11 / D-35606 Solms / Telephone +49 (0) 6442-208-0 / Telefax +49 (0) 6442-208-333 / info@leica-camera.com / www.leica-camera.com